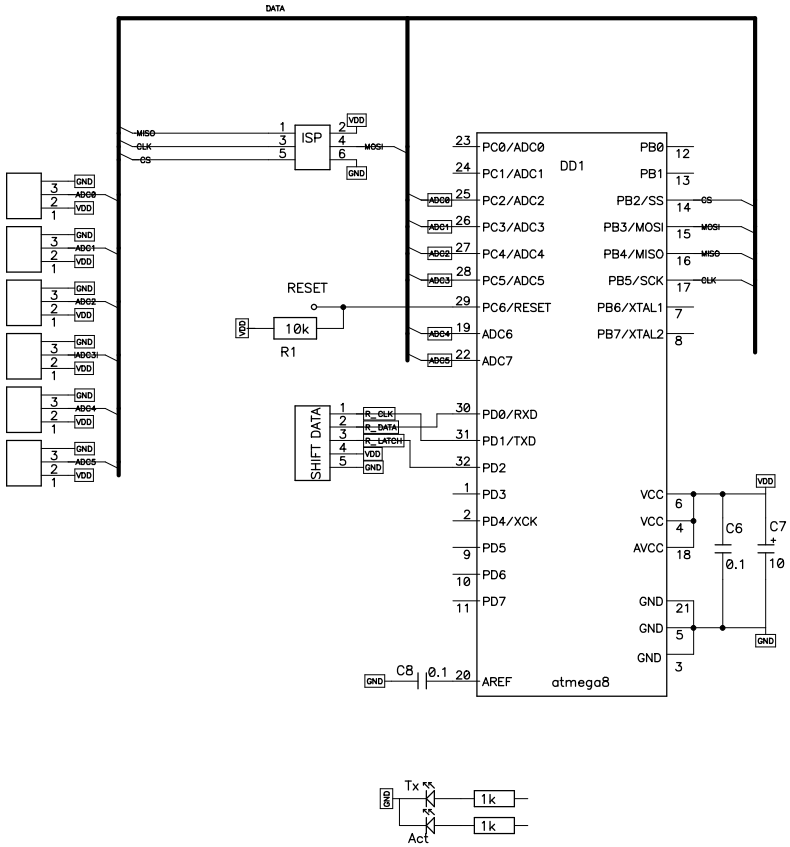
DATA
MISO
CLK
CS
ISP
VDD
MOSI
GND
DD1
PC0/ADC0
PC1/ADC1
PC2/ADC2
PC3/ADC3
PC4/ADC4
PC5/ADC5
PC6/RESET
ADC6
ADC7
PB0
PB1
PB2/SS
PB3/MOSI
PB4/MISO
PB5/SCK
PB6/XTAL1
PB7/XTAL2
RESET
10k
R1
SHIFT DATA
R_CLK
R_DATA
R_LATCH
PD0/RXD
PD1/TXD
PD2
PD3
PD4/XCK
PD5
PD6
PD7
VCC
AVCC
C6
0.1
C7
10
C8
AREF
atmega8
Tx
Act
1k