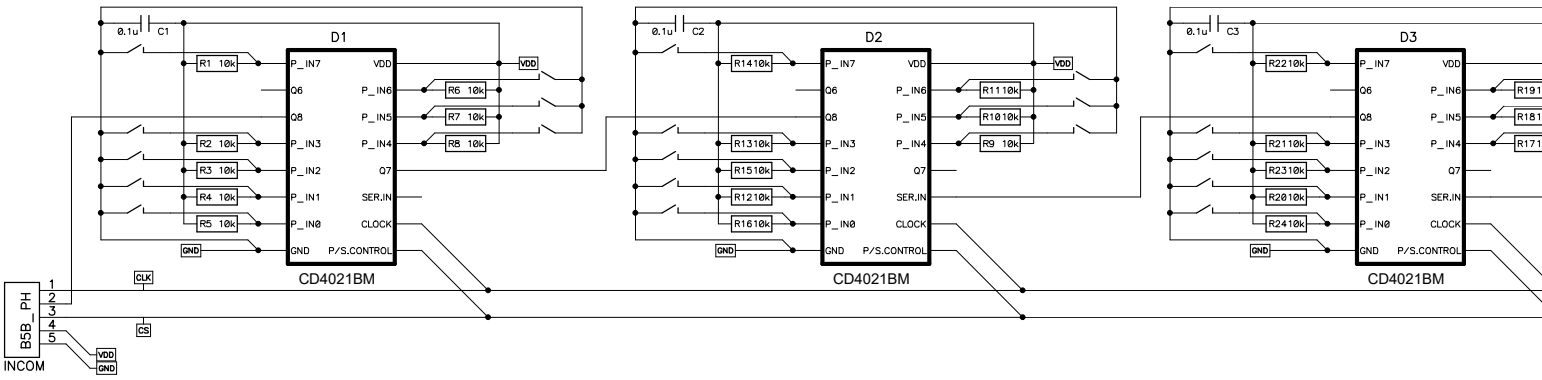
D1
D2
D3
CD4021BM
CD4021BM
CD4021BM
0.1u
C1
C2
C3
R1 10k
R2 10k
R3 10k
R4 10k
R5 10k
R6 10k
R7 10k
R8 10k
R9 10k
R1410k
R1310k
R1510k
R1210k
R1610k
R1110k
R1010k
R2210k
R2110k
R2310k
R2010k
R2410k
P_IN7
Q6
Q8
P_IN3
P_IN2
P_IN1
P_IN0
GND
VDD
P_IN6
P_IN5
P_IN4
Q7
SER.IN
CLOCK
P/S.CONTROL
VDD
GND
CLK
CS
B5B_PH
INCOM
1
2
3
4
5

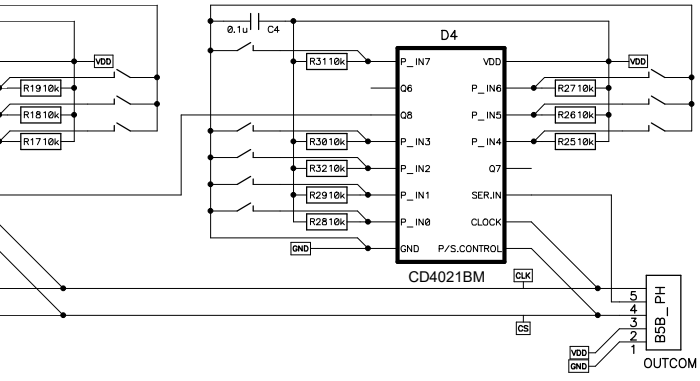
VDD
R1910k
R1810k
R1710k
0.1u
C4
D4
R3110k
P_IN7
VDD
Q6
P_IN6
Q8
P_IN5
R3010k
P_IN3
P_IN4
R3210k
P_IN2
Q7
R2910k
P_IN1
SER.IN
R2810k
P_IN0
CLOCK
GND
P/S.CONTROL
R2710k
R2610k
R2510k
CD4021BM
CLK
CS
5
4
3
2
1
BSB_PH
OUTCOM